ISO 05: On A and B with cross pilot
CAVITY: T-2A

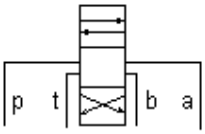

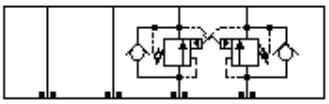

Counterbalance, On A and B, Cross-Piloted

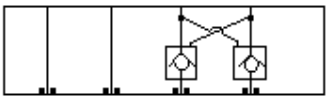

Pilot Operated Check, On A and B, Cross-Piloted

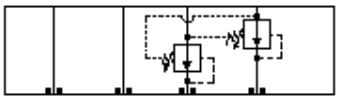

Reducing, On A and B drain to opposite port

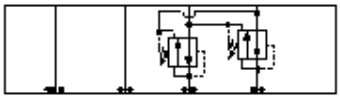

Reducing/Relieving, On A and B, Tank to Opposite Port

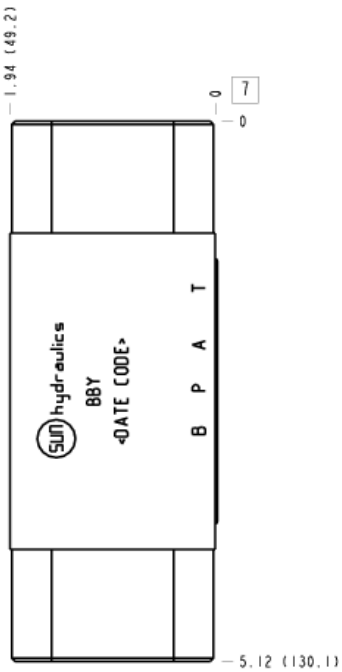

TECHNICAL DATA

Body Type	Sandwich
Interface	ISO 05
Body Features	On A and B with cross pilot
Stack Height	49 mm
Seal Plate Included (see notes)	No
Open Cavities	2
Cavity	T-2A
Model Weight	0.84 kg.

NOTES

- Seal retainer plate is not required for this model.
- ***Important:*** Carefully consider the maximum system pressure. The pressure rating of the manifold is dependent on the manifold material, with the port type/size a secondary consideration. Manifolds constructed of aluminum are not rated for pressures higher than 3000 psi (210 bar), regardless of the port type/size specified.

© 2024 Sun Hydraulics

INCLUDED COMPONENTS

Part	Description	Quantity
500-001-014	O-Ring	5
850-004-188	Plug	2

CONFIGURATION OPTIONS
Model Code Example: BBY

MODIFIER

	6061-T651 Aluminum, Buna-N
/11	6061-T651 Aluminum, Buna-N, Clear Anodize - Per MIL SPEC 8625F Type II, Class I
/10	6061-T651 Aluminum, Buna-N, Black Anodize - Per MIL SPEC 8625F Type II, Class II
/V	6061-T651 Aluminum, Viton
/16	6061-T651 Aluminum, Viton, Clear Anodize - Per MIL SPEC 8625F Type II, Class I
/15	6061-T651 Aluminum, Viton, Black Anodize - Per MIL SPEC 8625F Type II, Class II
/S	65-45-12 Ductile Iron, Buna-N, Dewatering Oil
/S4	65-45-12 Ductile Iron, Buna-N, Chem. Black
/S3	65-45-12 Ductile Iron, Buna-N, Trivalent Clear Zinc with Top Sealer
/Y	65-45-12 Ductile Iron, Viton, Dewatering Oil
/Y4	65-45-12 Ductile Iron, Viton, Chem. Black
/Y3	65-45-12 Ductile Iron, Viton, Trivalent Clear Zinc with Top Sealer

MANIFOLD FACES

FACE GRID

1	2	3	4
5	6	7	8
9	10	11	12

Face 2

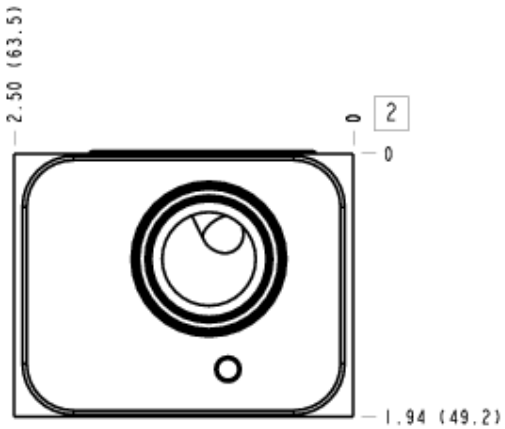

© 2024 Sun Hydraulics

Face 5

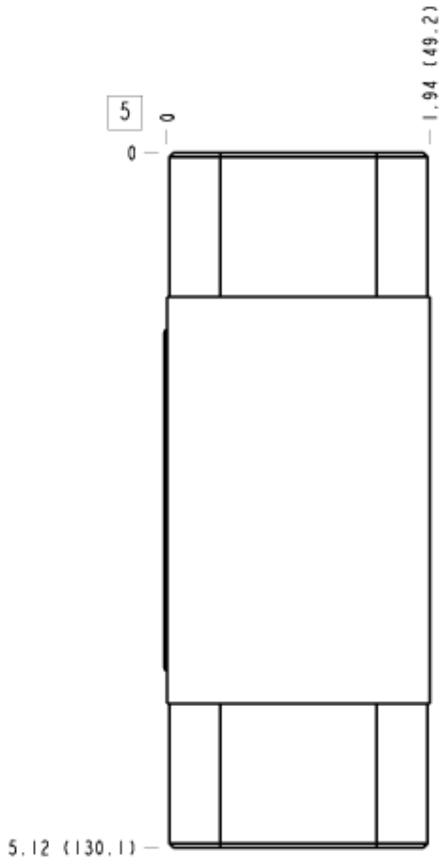

Face 6

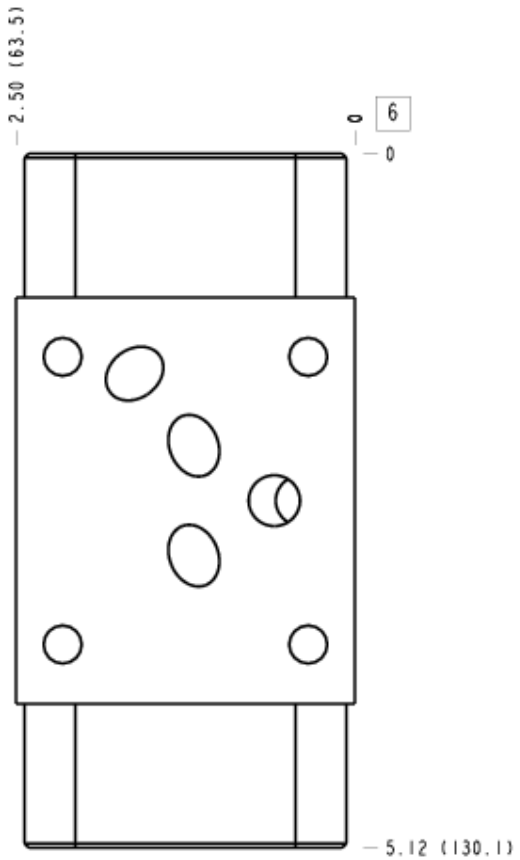

© 2024 Sun Hydraulics

Face 7

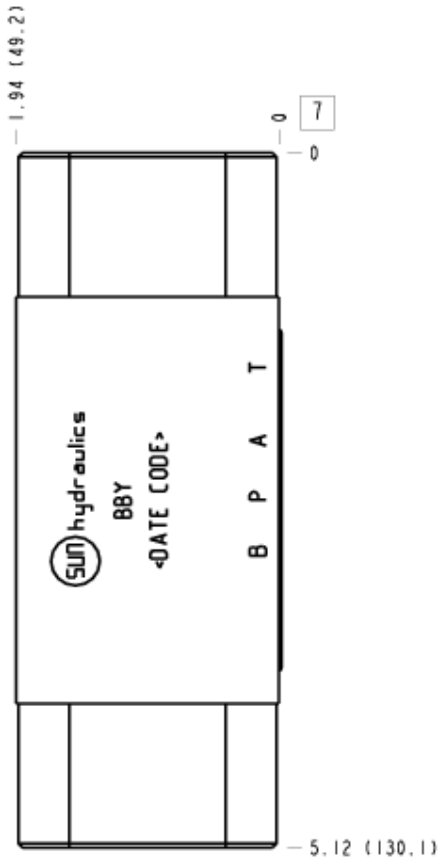

Face 8

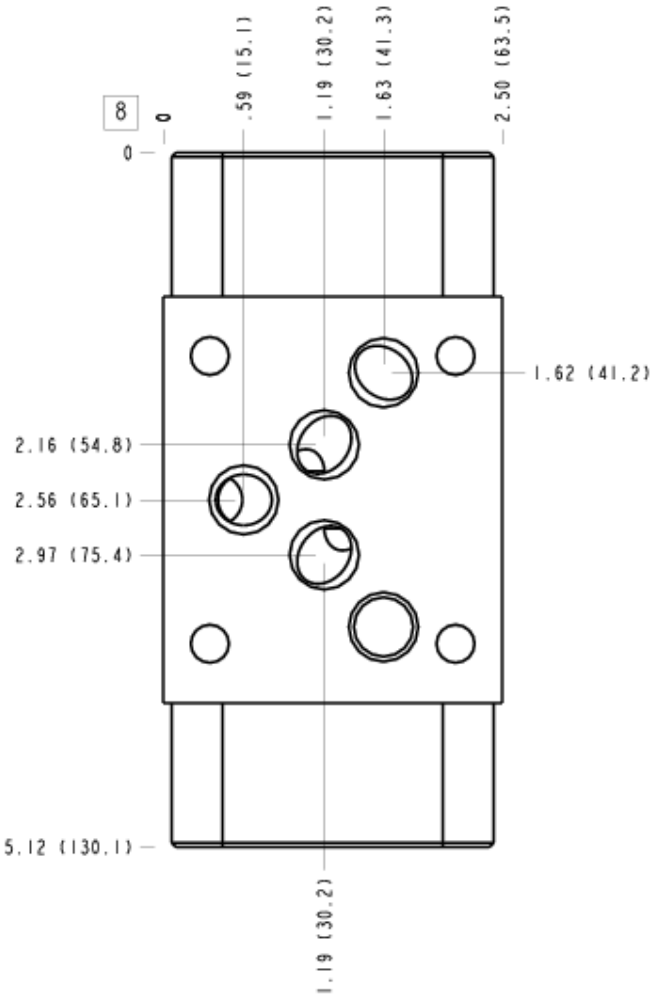

Face 10

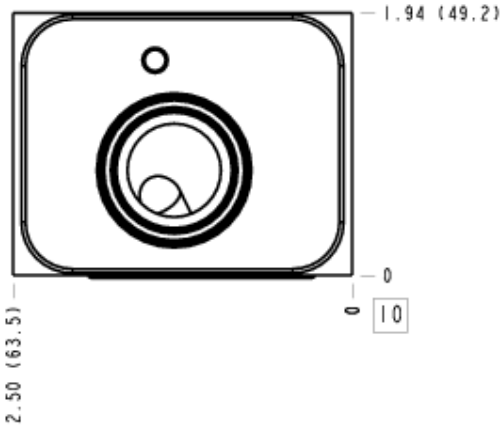

© 2024 Sun Hydraulics