MODEL
DTAF

FLeX Series 2-way, direct-acting, solenoid-operated directional blocking poppet valve

SERIES P / CAPACITY: 28 L/min. / CAVITY: T-8A

sunhydraulics.com/model/DTAF

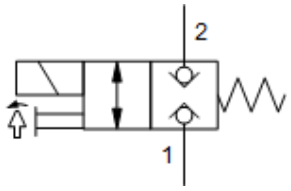

T-Control, C-Poppet

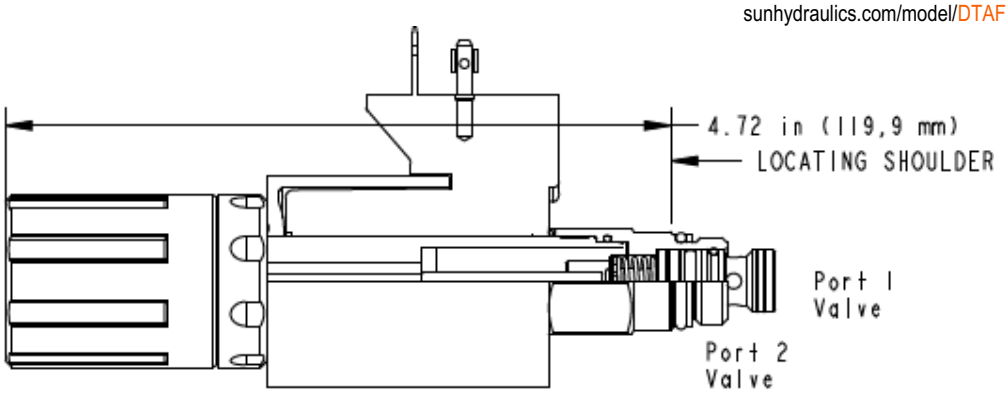

CONFIGURATION

T	Control	Twist (Momentary) Manual Override
C	Poppet Configuration	Normally Closed
N	Seal Material	Buna-N
224	Coil	DIN 43650-Form A, 24 VDC

This FLeX Series solenoid-operated 2-way, 2-position cartridge is a direct-acting directional poppet valve. Available in either normally open or normally closed configurations, these valves feature a pressure-balanced design, low leakage, and allow flow or blocking in both directions.

This cartridge can be installed directly into a cavity in the end of many of Sun's pilot operated and ventable valves to provide integrated pilot control.

TECHNICAL DATA

NOTE: DATA MAY VARY BY CONFIGURATION. SEE CONFIGURATION SECTION.

Maximum Operating Pressure	350 bar
Maximum Valve Leakage at 110 SUS (24 cSt)	0,07 cc/min.@350 bar
Viscosity Range	2,8 - 380 cSt
Response Time - Typical	50 ms
Switching Frequency	15,000 max. cycles/hr
U.S. Patent #	10,302,201
Seal kit - Cartridge	Buna: 990608007
Seal kit - Cartridge	Viton: 990608006

NOTES

- For Series 1 cartridges configured with an O control (panel mount handknob), a .75 in. (19 mm) diameter hole is required in the panel.
- Please verify cartridge clearance requirements when choosing a Sun manifold. Different valve controls and coils require different clearances.
- An additional 2.00 inches (50,8 mm) beyond the valve extension is needed for coil installation and removal.

CONFIGURATION OPTIONS

Model Code Example: DTAFTCN224

CONTROL (T)

- **T** Twist (Momentary) Manual Override
- **X** No Manual Override
- **D** Twist/Lock (Dual) Manual Override
- **L** Twist/Lock (Detent) Manual Override
- **M** Manual Override

POPPET CONFIGURATION (C)

- **C** Normally Closed
- **H** Normally Open

SEAL MATERIAL (N)

- **N** Buna-N
- **E** EPDM
- **V** Viton

COIL * (224)

- **224** DIN 43650-Form A, 24 VDC
- No coil

* Additional coil options are available

© 2024 Sun Hydraulics

CONFIGURATION

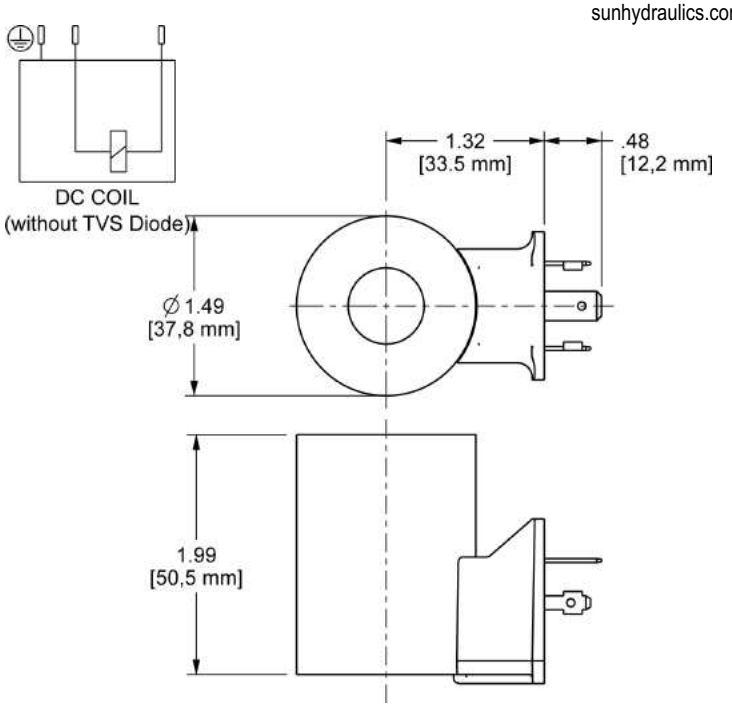

TECHNICAL DATA

Operating Temperature Range	-40 to 110 °C
Arc Suppression (TVS)	None
Power Consumption (cold) - at rated voltage	25 Watts
Maximum Ambient Temperature	50 °C
Voltage/Frequency	24 VDC
Operating Voltage Range	+10%/-15%
Duty Cycle Rating	100 %
Connector	ISO4400 - EN/DIN175301-803, Form A (ISO/DIN 43650) 3-pin
Coil Nut Torque	0,5 Nm

USED WITH

DBAF	DBAFS	DFBF	DFBG	DFCI	DFCJ	DFDI	DFDJ	DFEI	DFEJ
DFFI	DFFJ	DLDF	DLDFS	DMBF	DNBF	DTAF	DTAFS	DTBF	DTCF
DTDF	DTDFS	DWBF	DWDF	FDEP	FMDF	FMDG	FPBF	FPBG	FPBI
FPBJ	FPBU	FREP	PRDF	PRDG	RPEI	RVCK	RVCL	RVCM	RVCN
991711300	991711600	991712300	991712600	991713030	991713060	991740001	XMD-01	XMD-02	

© 2024 Sun Hydraulics