MODEL
**DMBF**

FLeX Series 3-way, solenoid-operated directional spool valve
**CAPACITY: 15 L/min. / CAVITY: T-150A**

sunhydraulics.com/model/DMBF

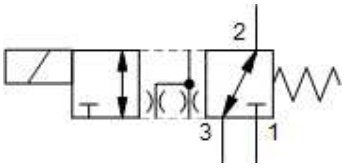


X-Control, N-Spool

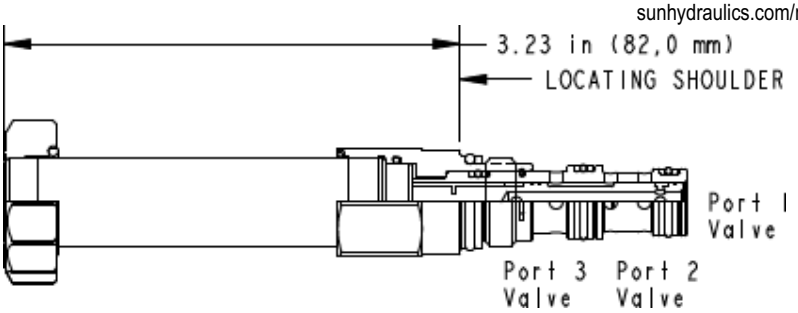


## CONFIGURATION

| | | |
|---|---|---|
| **X** | Control | No Manual Override |
| **N** | Spool Configuration | Normally Open 2 to 3, Closed 1 to 2 |
| **N** | Seal Material | Buna-N |
| **(none)** | Coil | No coil |

This FLeX Series solenoid-operated 3-way, 2-position cartridge is a direct-acting, balanced spool directional valve.

## TECHNICAL DATA

NOTE: DATA MAY VARY BY CONFIGURATION. SEE CONFIGURATION SECTION.

| | |
|---|---|
| Maximum Operating Pressure | 350 bar |
| Typical Valve Leakage at 110 SUS (24 cSt) Inlet on 1 | 164 cc/min.@350 bar |
| Typical Valve Leakage at 110 SUS (24 cSt) Inlet on 2 or 3 | 82 cc/min.@350 bar |
| Response Time - Typical | 50 ms |
| Switching Frequency | 15,000 max. cycles/hr |
| Seal kit - Cartridge | Buna: 990150007 |
| Seal kit - Cartridge | Viton: 990150006 |

## NOTES

- Please verify cartridge clearance requirements when choosing a Sun manifold. Different valve controls and coils require different clearances.
- An additional 2.00 inches (50,8 mm) beyond the valve extension is needed for coil installation and removal.

## CONFIGURATION OPTIONS

**Model Code Example: DMBFXNN**

| CONTROL | (X) | SPOOL CONFIGURATION | (N) | SEAL MATERIAL | (N) | COIL * |
|---|---|---|---|---|---|---|
| **X** No Manual Override | | **N** Normally Open 2 to 3, Closed 1 to 2 | | **N** Buna-N | | No coil |
| **P** Manual Pull Override | | **A** Normally Open 1 to 2, Closed 1 to 3 | | **E** EPDM | | * Additional coil options are available |
| | | | | **V** Viton | | |

© 2024 Sun Hydraulics