MODEL
DNBF

FLeX Series 4-way, 2-position, solenoid-operated directional spool valve
CAPACITY: 15 L/min. / CAVITY: T-30A

sunhydraulics.com/model/DNBF

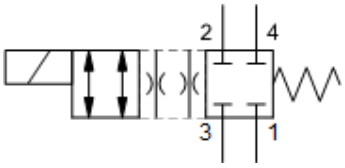

X-Control, C-Spool

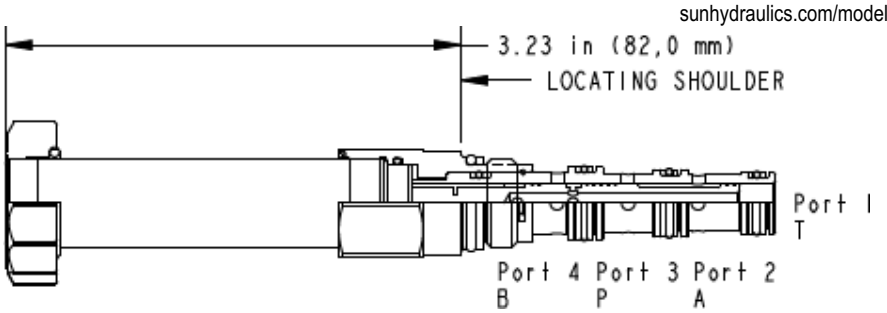

CONFIGURATION

X	Control	No Manual Override
C	Spool Configuration	Closed, Shift to Through
N	Seal Material	Buna-N
(none)	Coil	No coil

This FLeX Series solenoid-operated 4-way, 2-position cartridge is a direct-acting, balanced spool directional valve.

TECHNICAL DATA

NOTE: DATA MAY VARY BY CONFIGURATION. SEE CONFIGURATION SECTION.

Maximum Operating Pressure	350 bar
Typical Valve Leakage at 110 SUS (24 cSt) - Except N Spool	66 cc/min.@350 bar
Typical Valve Leakage at 110 SUS (24 cSt) - N Spool, Inlet on 3	115 cc/min.@350 bar
Response Time - Typical	50 ms
Switching Frequency	15,000 max. cycles/hr
Seal kit - Cartridge	Buna: 990030007
Seal kit - Cartridge	Viton: 990030006

NOTES

- Please verify cartridge clearance requirements when choosing a Sun manifold. Different valve controls and coils require different clearances.
- An additional 2.00 inches (50,8 mm) beyond the valve extension is needed for coil installation and removal.

CONFIGURATION OPTIONS

Model Code Example: DNBFXCN

CONTROL	(X)	SPOOL CONFIGURATION	(C)	SEAL MATERIAL	(N)	COIL *
X No Manual Override		**C** Closed, Shift to Through		**N** Buna-N		No coil
P Manual Pull Override		**D** Closed, Shift to Cross		**E** EPDM		
		E Cross, Shift to Closed		**V** Viton		
		N Through, Shift to Cross				
		T Tandem, Shift to Through				
		V Cross, Shift to Tandem				

* Additional coil options are available

© 2024 Sun Hydraulics